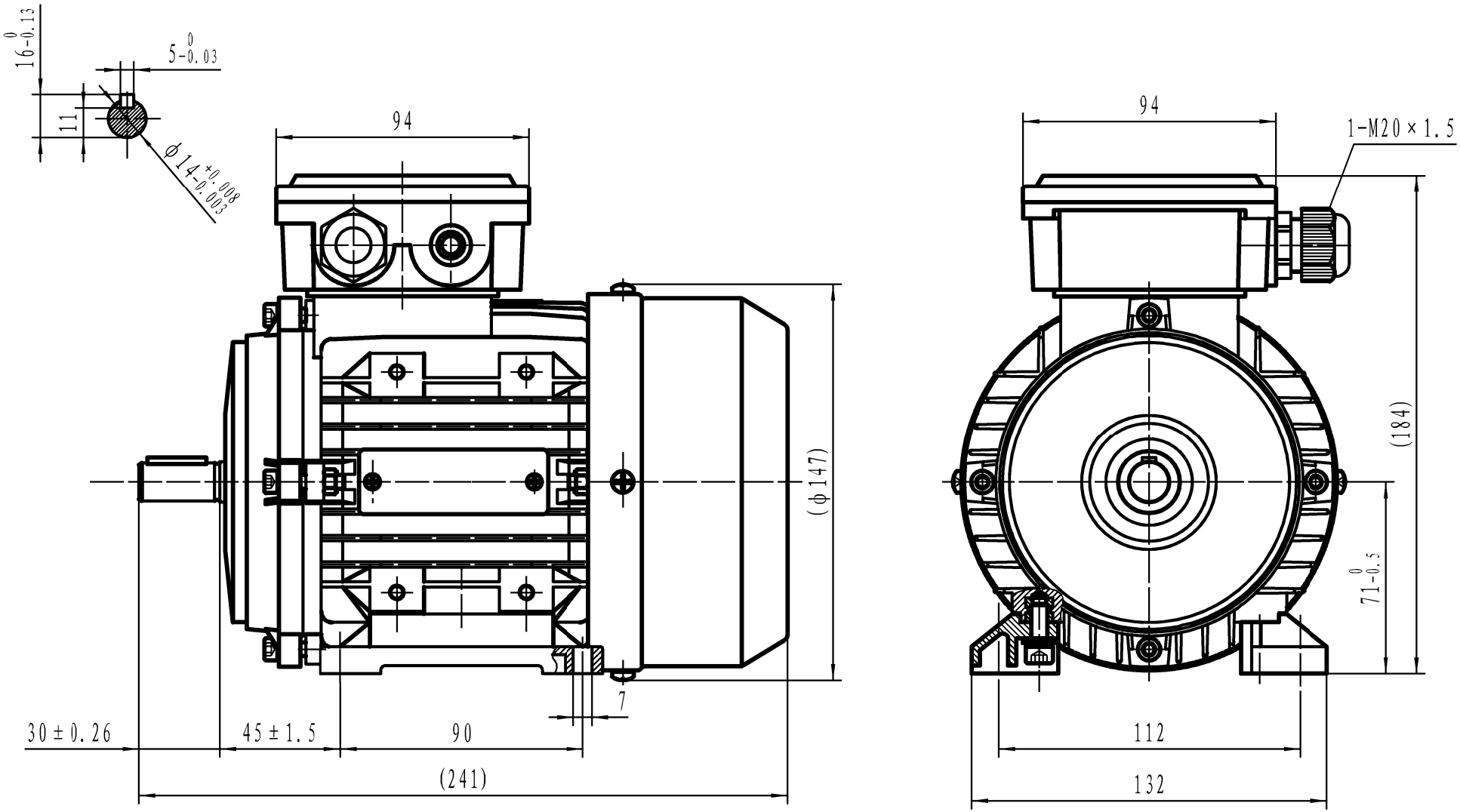

							MS71S B3

Felandia