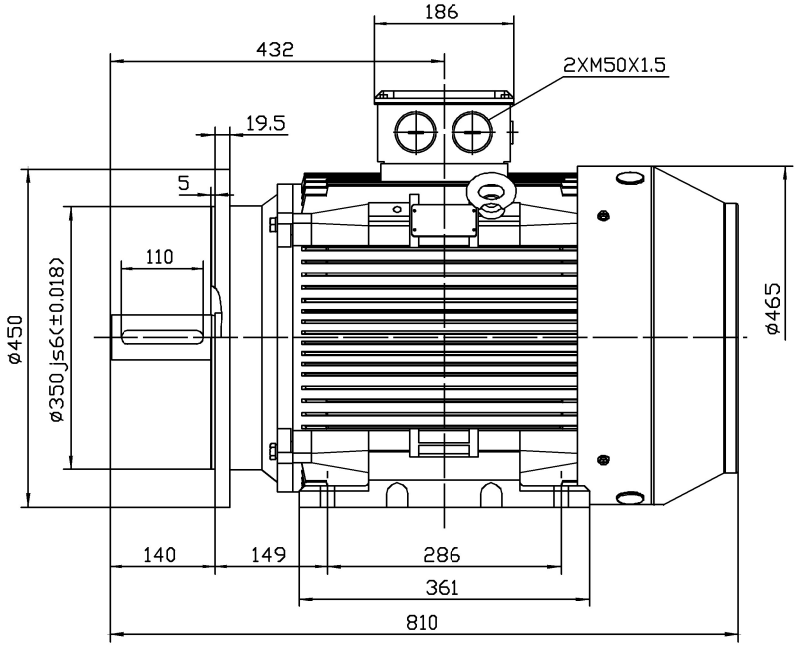

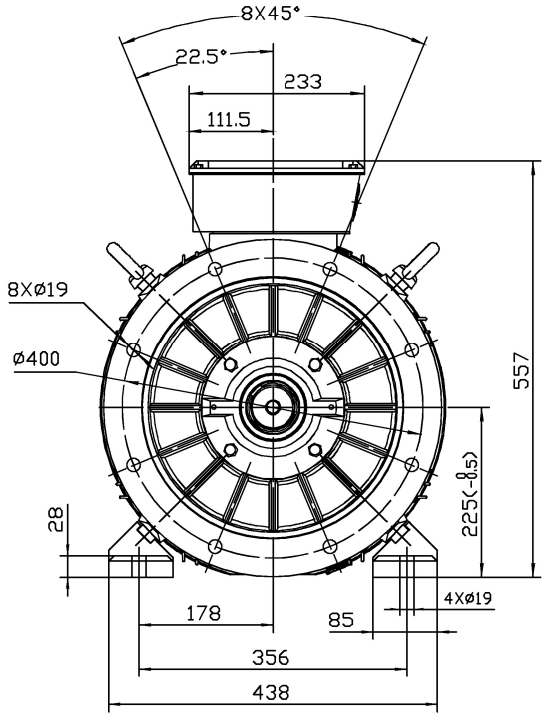

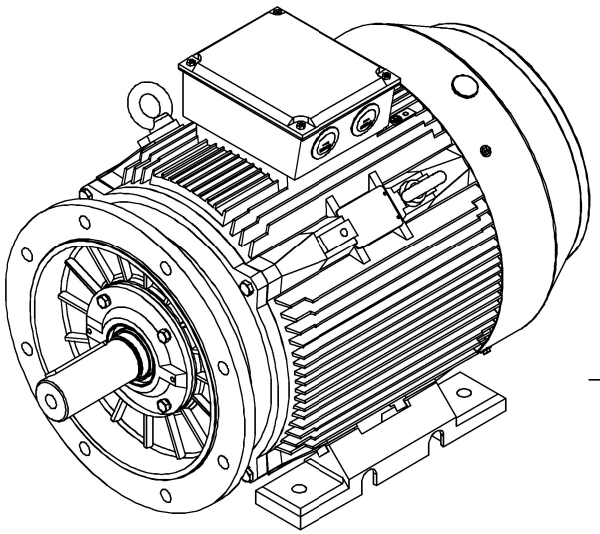

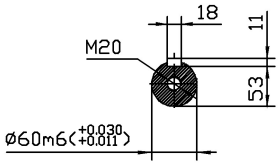

TC 225S-4.6.8P B35

TC 225S-4.6.8P B35	
Felandia	