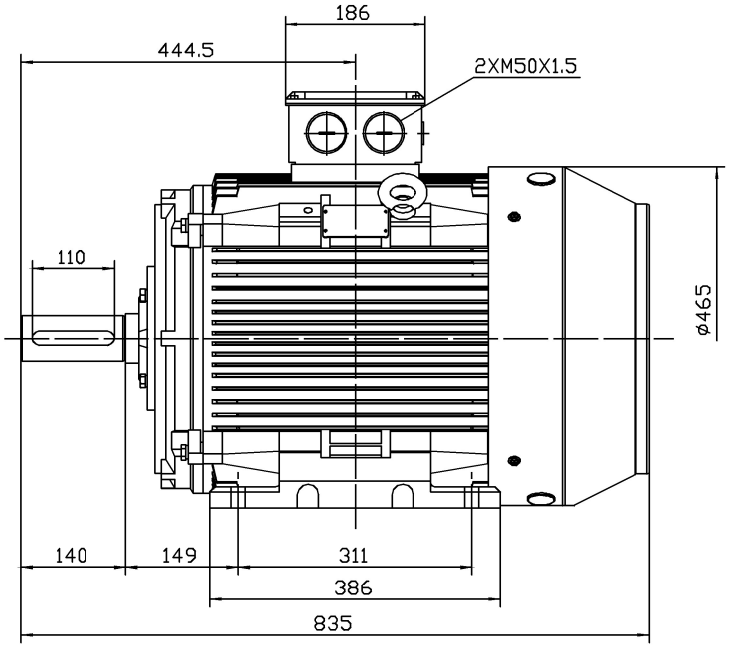

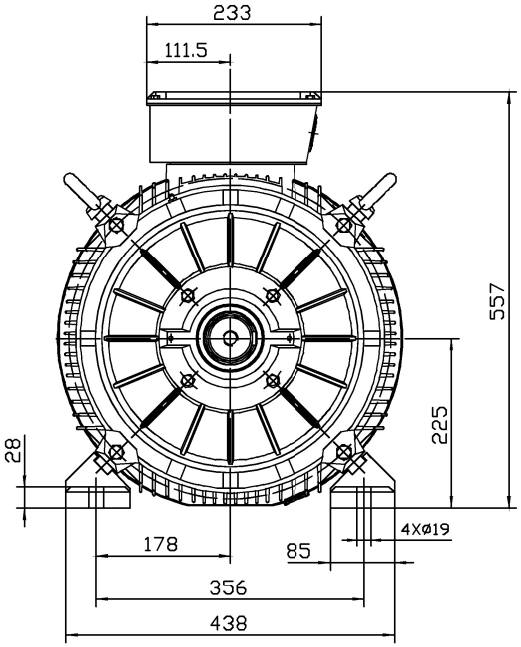

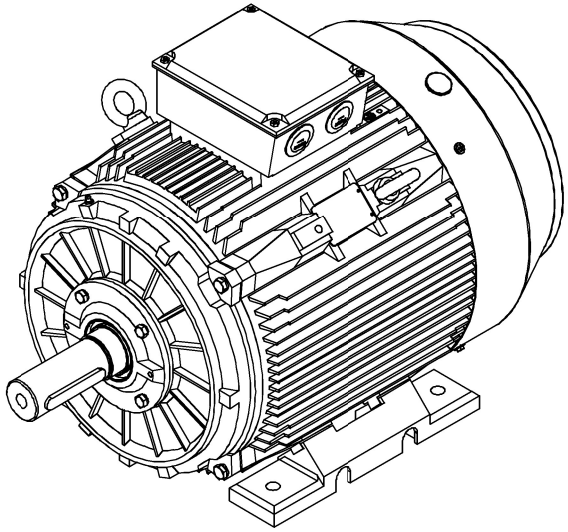

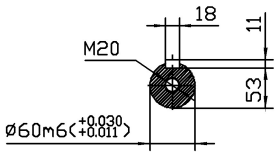

TC 225M-4.6.8P B3

TC 225M-4.6.8P B3	
Felandia	