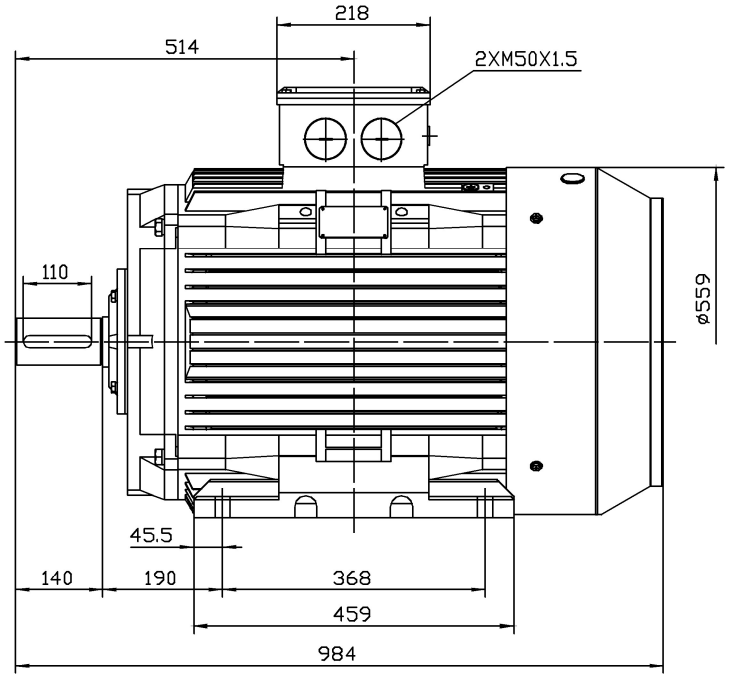

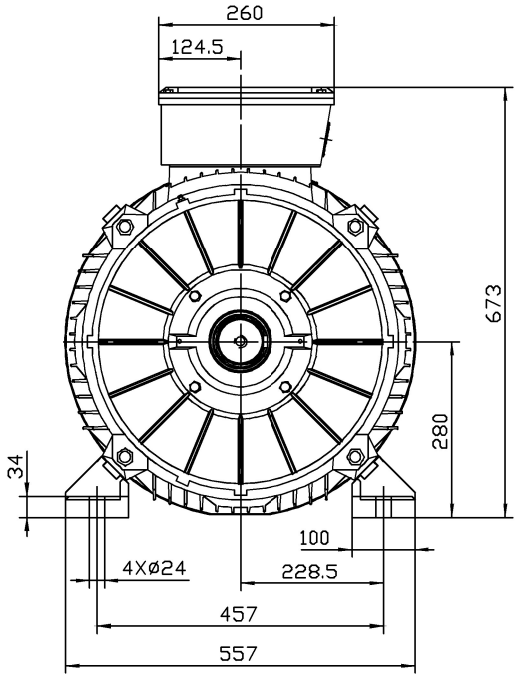

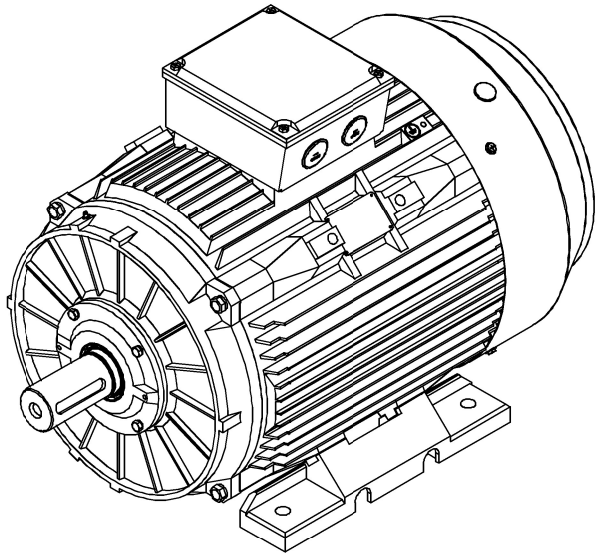

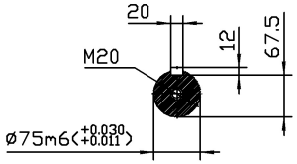

TC 280S-4.6.8P B3

TC 280S-4.6.8P B3	
Felandia	